hygger®

E-mail: distributor@hyggeraquarium.com Website: www.hyggeraquarium.com

HG027 USER MANUAL

hygger aquarium waterfall filter

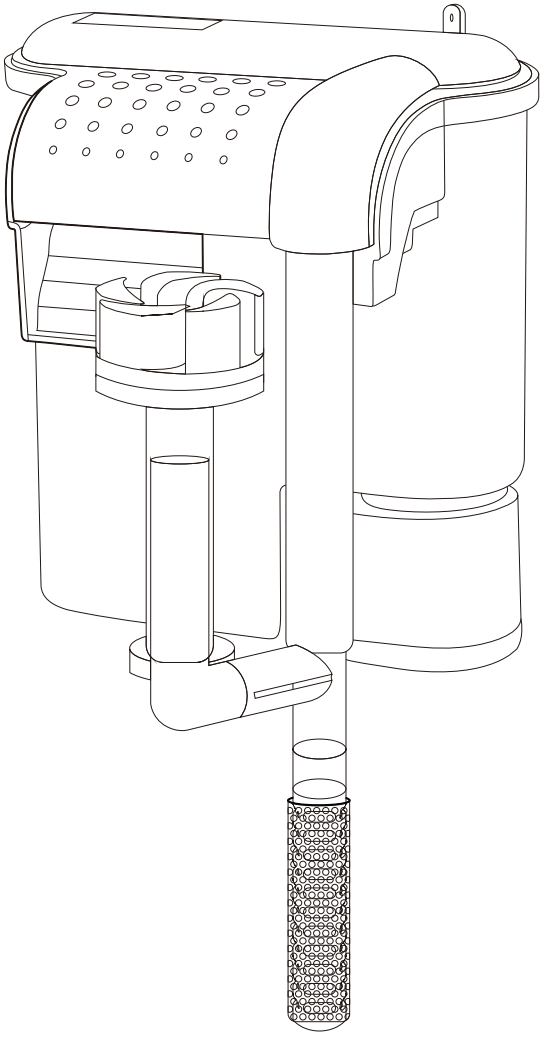

This product is a hang-on-back filter with a waterfall aeration filter design. It is also an oil spills remover, which can remove the oil and floating substances on the water surface while floating up and down with it. The output flow is adjustable and the extendable inlet tube can be adjusted according to different water levels. The filter cotton in the inlet tube can prevent fish fries from sucking in. Being equipped with a powerful pump, the product can filter circulating water quickly and quietly. The filter box has multi-layers filter cotton, which can filter impurities and purify water quality with a pressure filter principle.

** Please read this manual carefully before using this product and follow the instructions to ensure proper operation**

1. PRODUCT FEATURES:

1. Waterfall aeration filter design.
2. Pressure filter principle, multi-layer and high density filter cotton biochemical sponge.
3. Oil spills remover: Can remove oil spills and substances on the water surface.
4. Equipped with a water pump, filter circulating water quickly and quietly.

2. INSTALLATION INSTRUCTIONS

This is an example of a M-sized product

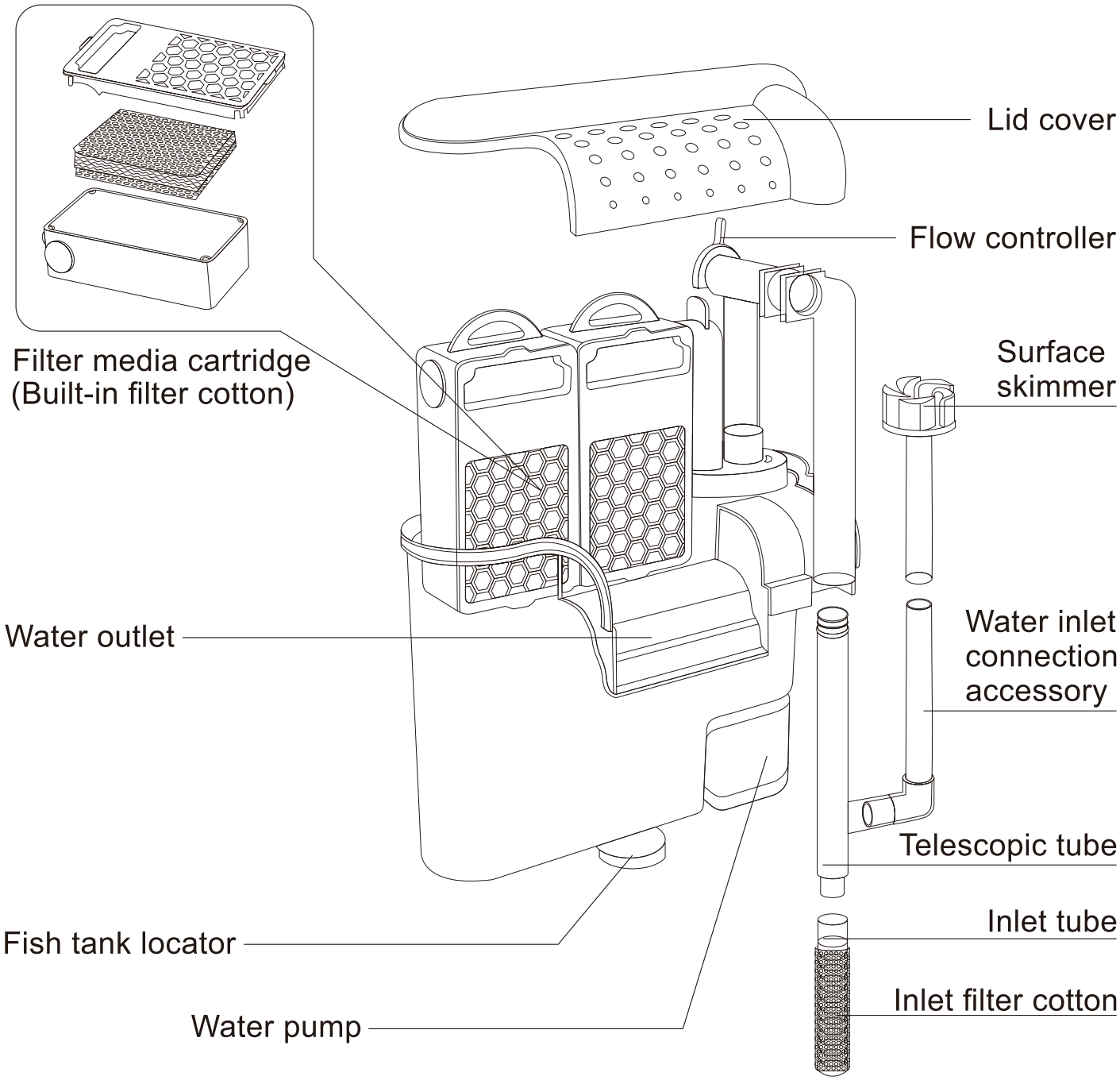

Product Picture

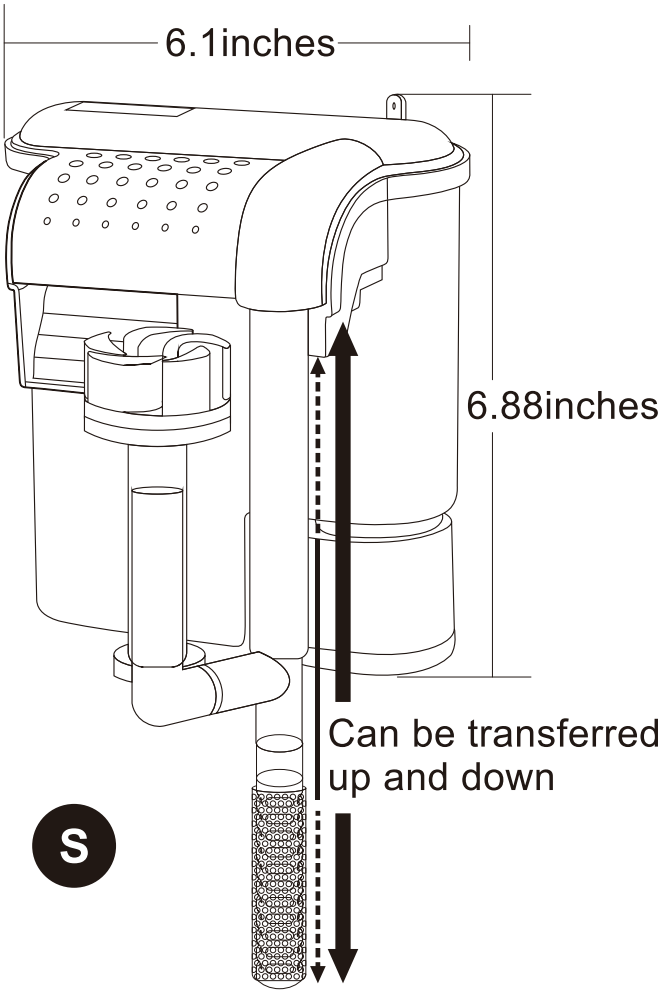

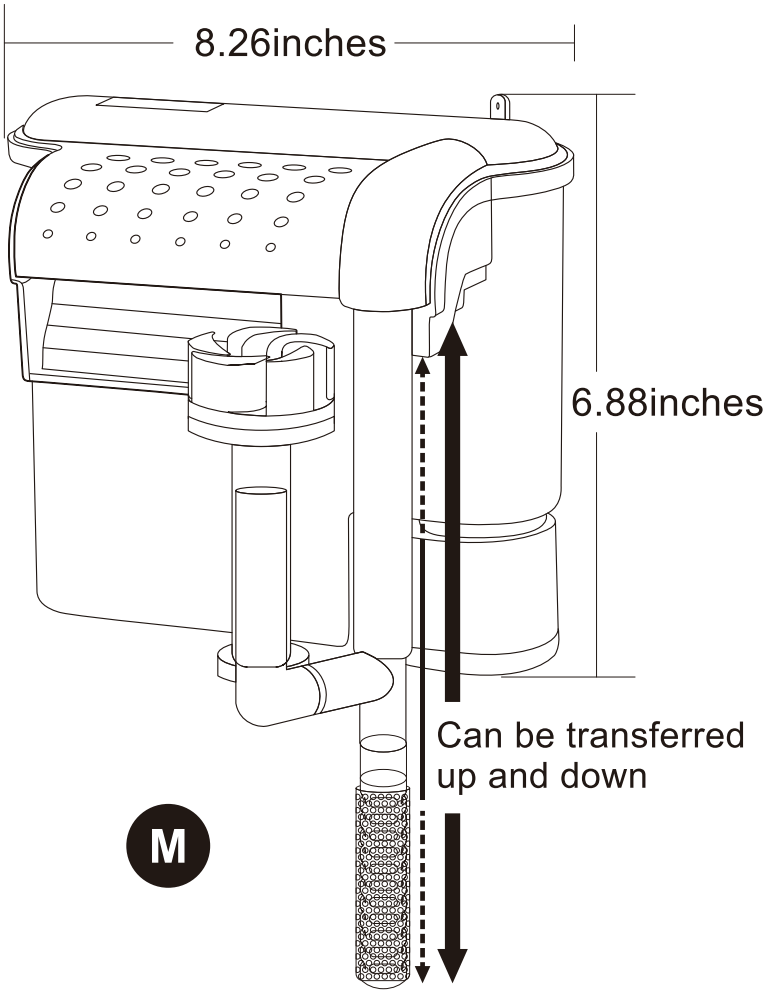

Product Parameters

Model	S	M
Voltage	AC 110-120V 60Hz AC 220-240V 50Hz	
Power	4W	5W
Q.Max	100GPH(380L/H)	127GPH(480L/H)
Sound	<30 dB	<30 dB
Cord length	5.9ft(1.8m)	5.9ft(1.8m)
Application	5-8Gal(18~30L)	9-16 Gal(34~60L)
Filter cartridge	1PCS	2PCS

Precautions

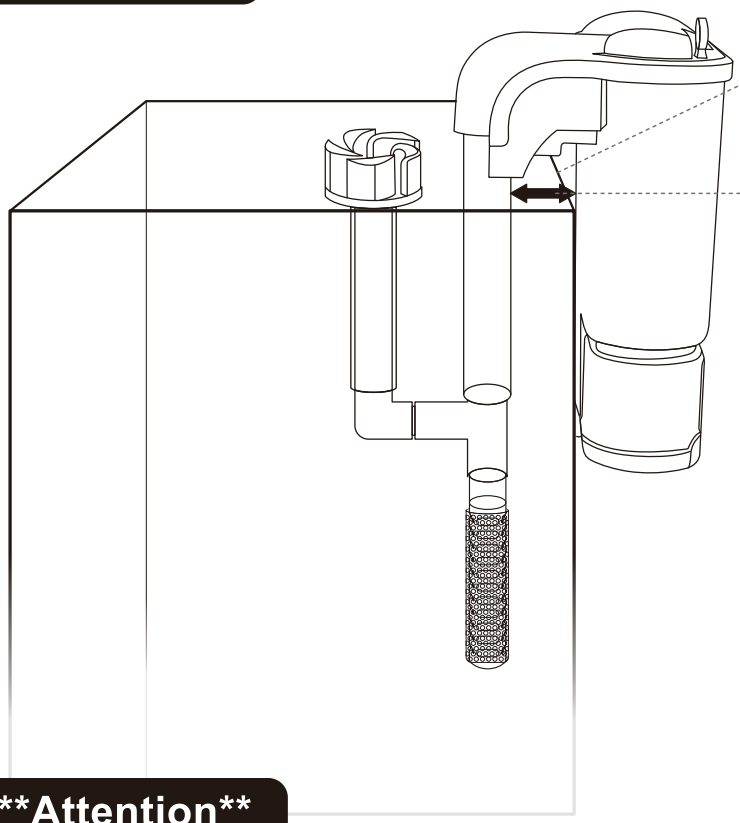

Attention

1. If the oil remover doesn't rotate, there might be an overlap between the remover and the tube. Normally, there should be a height difference between them.

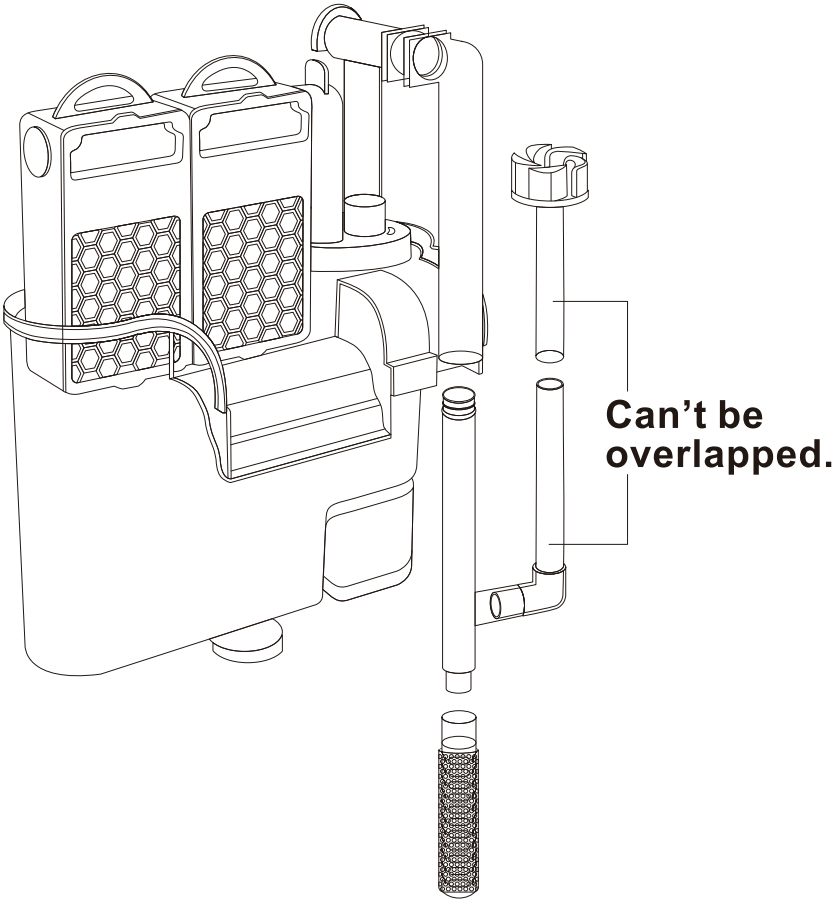

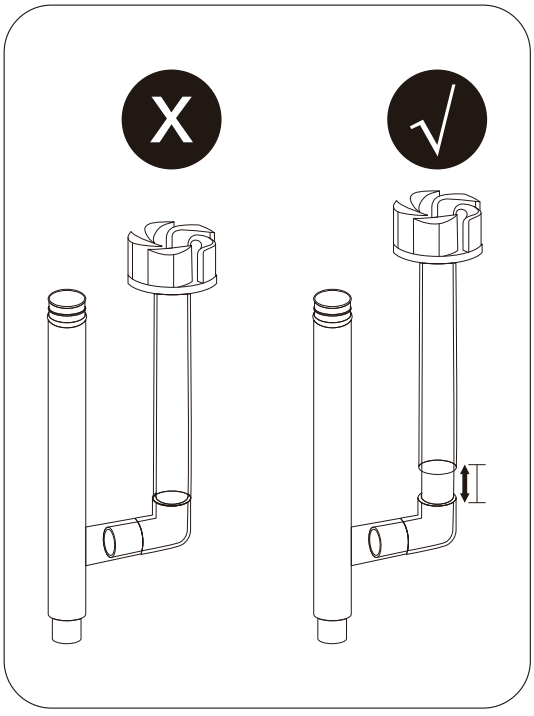

2. A working wave maker pump will also cause this problem.

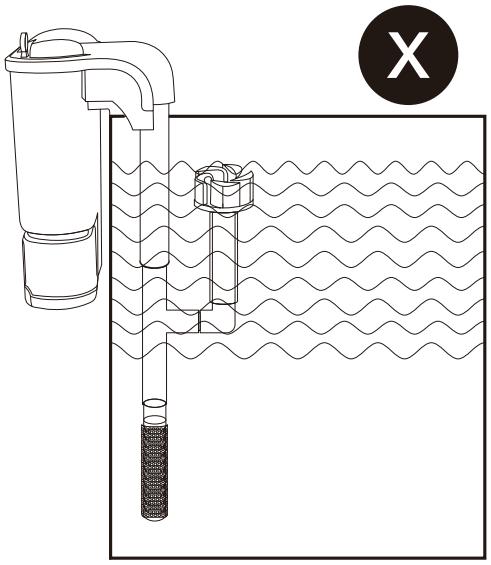

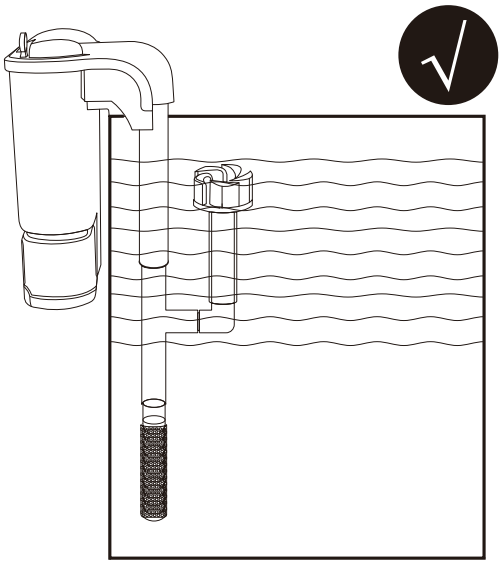

3. Do not use a tank with a depth below 9.6inches to avoid oil remover failure.

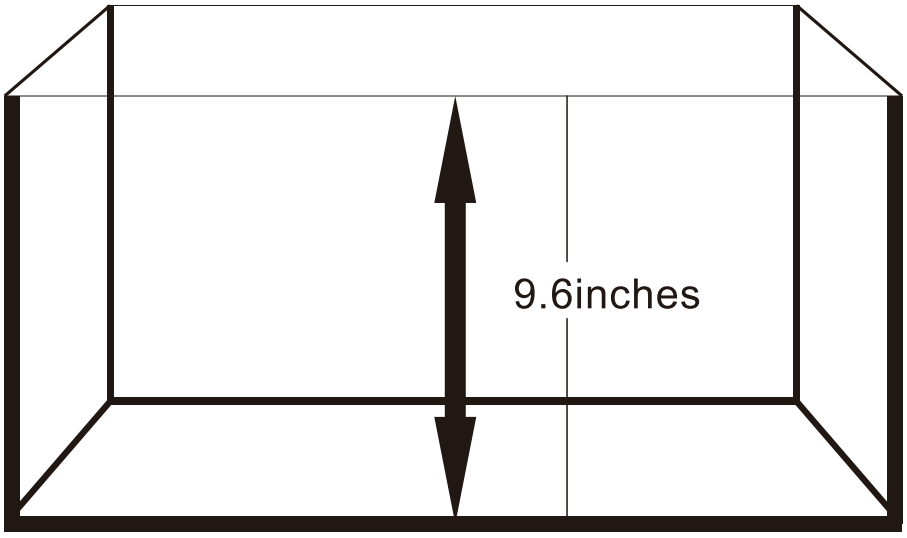

****Instructions****

1) Please fill the waterfall chamber with around 700ml (about 2.5 cups) of water before plugging the filter in for the first time.

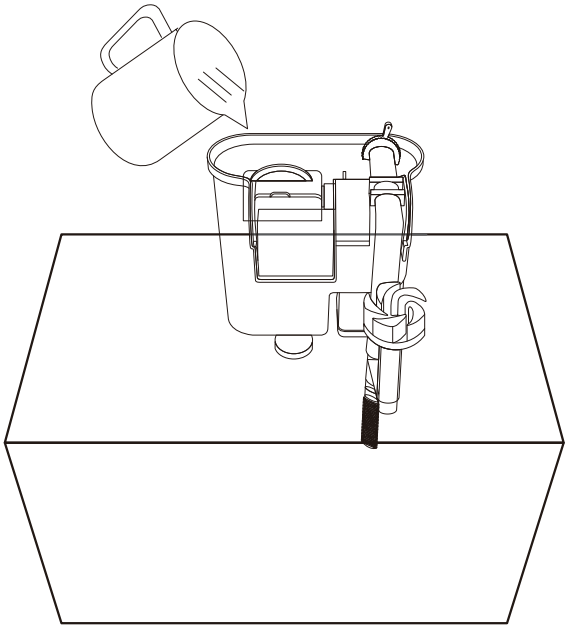

2) Be sure the water level in the tank is not lower than the water mark.

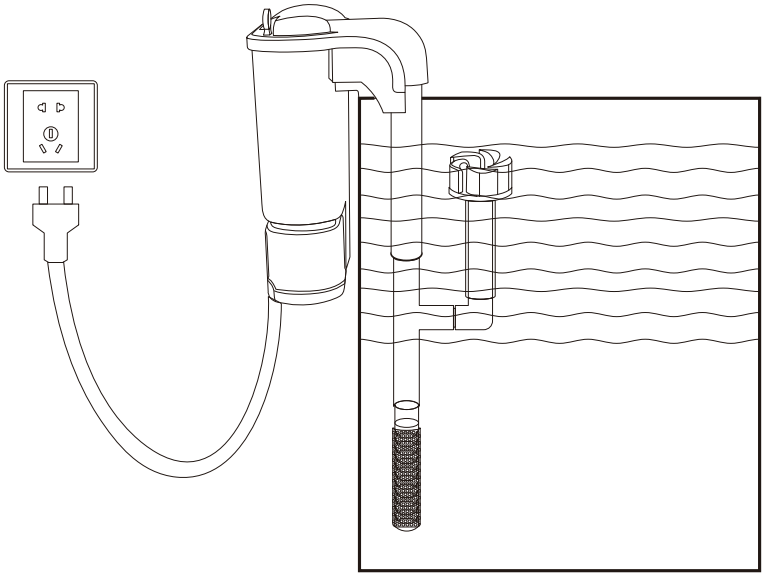

3) The filter sponge is suggested to be replaced every 2 weeks to 1 month depending on the number of fish, filthiness, or the extent of degradation.

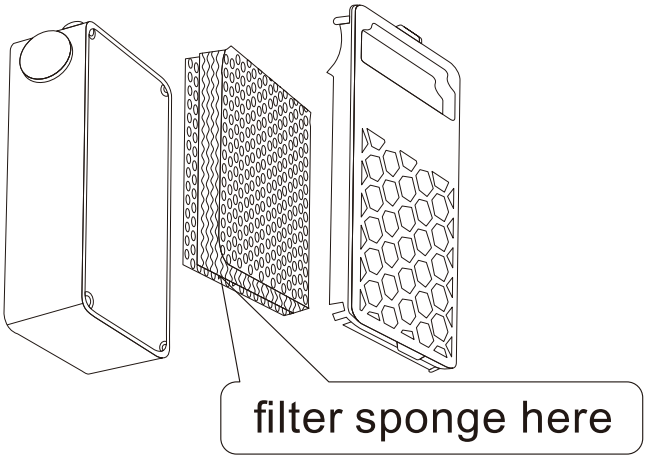

4) Unplug the filter before maintenance.

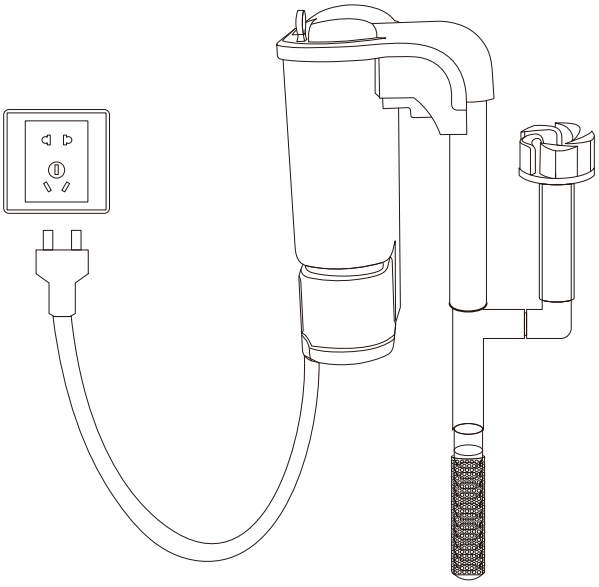

5) The temperature range for the filter is 33.8~95°F.

3. TROUBLE SHOOTINGS

No water flow	Power off	Check whether the filter is plugged in
	Something in the rotor prevents it from running	Clean the rotor
	The water inlet tube is installed incorrectly	Reinstall the surface skimmer
Abnormal sound	The water level is below the water mark	Add water to the aquarium
	The water inlet tube is installed incorrectly	Reinstall the surface skimmer
Surface skimmer does not rotate or rotates slowly	Small flow and slow rotation	Need to increase the flow
	The oil remover is too far from the water waterfall	The oil remover is within 1.9 inches from the water waterfall
Decreased flow	Filter media is full	Replace the filter media

4. PACKAGE INCLUDES

1) 1x User manual
2) 1x Aquarium waterfall filter
3) 1x Water pipe
4) 1x Inlet cover
5) (S)1x Filter sponge ((M) 2x Filter sponge)
6) 1x Low water lever pipe
7) 1x Surface skimmer
8) 1x Fish tank positioning buckle
9) 1x Inlet filter cotton
10) 1x Flow regulating valve

⚠ 5. WARNINGS

To guard against injury, basic safety precautions should be observed including the followings:

1. Read and follow this user manual strictly.

2. DANGER- To avoid possible electric shock, special care should be taken. For each of the following situations, do not attempt to repair yourself. Instead, return the appliance to an authorized service facility for maintenance or discard it.

A. If the appliance falls into the water, DON'T reach for it! First, unplug it and then retrieve it. If the electrical components of the appliance get wet, unplug the appliance immediately.

B. If the appliance shows any sign of abnormal water leakage, immediately unplug it from the power source.

C. Carefully examine the appliance after installation. It should not be plugged in if there is water on parts that are not intended to be wet.

D. Do not operate any appliance if it has a damaged cord or plug, is malfunctioning, dropped or damaged in any manner.

E. To avoid the possibility of the appliance plug getting wet, position the aquarium and its stand to one side of a wall mounted outlet to prevent water from dripping onto the outlet or plug. A “drip loop”, shown in the figure below, should be arranged by the user for each cord, which connects the appliance to the outlet. If an extension cord is used, the “drip loop” is the part of the cord below the level of the outlet or the connector that prevents water traveling along the cord and coming in contact with the outlet. If the plug or outlet does get wet, DO NOT unplug the cord. Disconnect the fuse to the circuit breaker that supplies power to the heater. Then unplug and examine for the presence of water in the outlet. If you are not sure, consult a certified electrician.

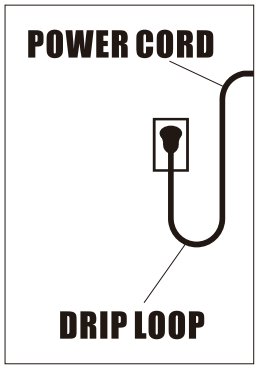

3. Close supervision is necessary when the filter is used near children.

4. To avoid injury, do not touch moving or hot parts.

5. Always unplug the filter from the outlet when it is not in use, before putting on or taking off parts, and before maintenance or placing hands in the water. Never yank the cord to pull the plug from the outlet. Grasp the plug and pull gently to disconnect.

6. Do not use the filter for other than intended use. The use of attachments not recommended or sold by the appliance manufacturer may cause an unsafe condition and will void the warranty.

7. Do not install or store the filter where it will be exposed to the weather or to temperatures below freezing. This filter is suitable for use in water temperatures less than 95°F.

8. Make sure the filter is securely installed before operating it.

9. Read and observe all the important notices on the filter.

10. If an extension cord is necessary, a cord with a proper rating should be used. A cord rated for less amperes or watts than the appliance rating may overheat. Care should be taken to arrange the cord so that it will not be tripped over or pulled.

11. The filter is intended FOR HOUSEHOLD USE ONLY.

12. SAVE THIS USER MANUAL.

6. ONE YEAR LIMITED WARRANTY:

This product MUST be purchased from an authorized hygger reseller. Visit our website for a list of unauthorized resellers. Hygger warrants this product against defects in materials and worksmanship for ONE(1) YEAR from the date of original retail purchase and is none transferable.Warranty on all products, including aquariums. But it is limited to the replacement of the products and does not cover fish loss, personal injury, property loss or direct, incidental or consequential damage arising from the use of this product.

Note: Hygger One-year Limited Warranty does not cover damage caused by the followings: improper installation saltwater corrosion, electrical surges or modifications.If you discover a defect, please contact hygger,who will, at it's option, repair or replace the product at no charge to you, provided that you return it during the warranty period. A copy of the bill of sale is required as a proof of original purchase date in the event of the product needing repairs within the warranty period. Hygger does not warrant any products that are not belong to hygger.

This warranty does not apply if the product has been damaged by accident, abuse, misuse or misapplication or if the product has been modified without the written permission of hygger.

7. DISPOSAL

Do not dispose this product as unsorted municipal waste. Collection of such waste separately for special treatment is necessary. This product has to be disposed at an authorized place for the recycling of electrical and electronic appliances rather than being disposed together with the domestic waste. Collecting and recycling waste is a way of saving natural resource sand you can make sure the product is disposed in an environmentally friendly way.

CONTACT INFORMATION:

Brand owner: Shenzhen Mago Trading Co., Ltd
Add: Bantian Group Business Central，Longgang District, Shenzhen City，Guangdong Province，China

E-mail: distributor@hyggeraquarium.com

Website: www.hyggeraquarium.com

Please provide your amazon order id (amazon invoice) and shipping address if you have any problems.Thank you for choosing hygger!

MADE IN CHINA